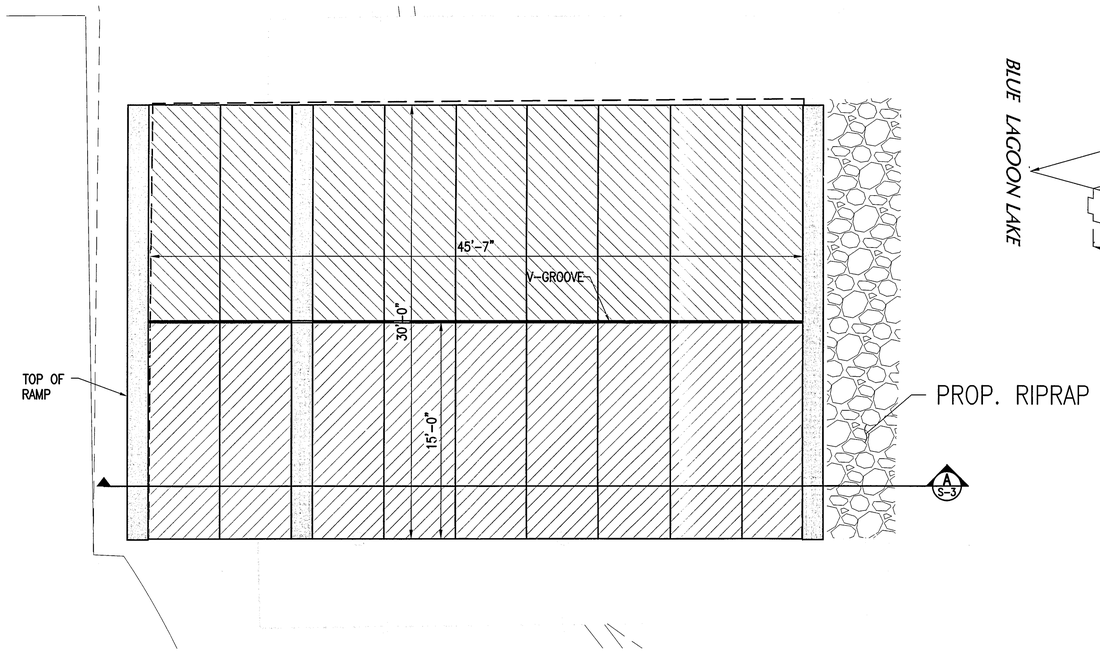

PROPOSED BOAT RAMP PLAN
SCALE: 1" = 5'

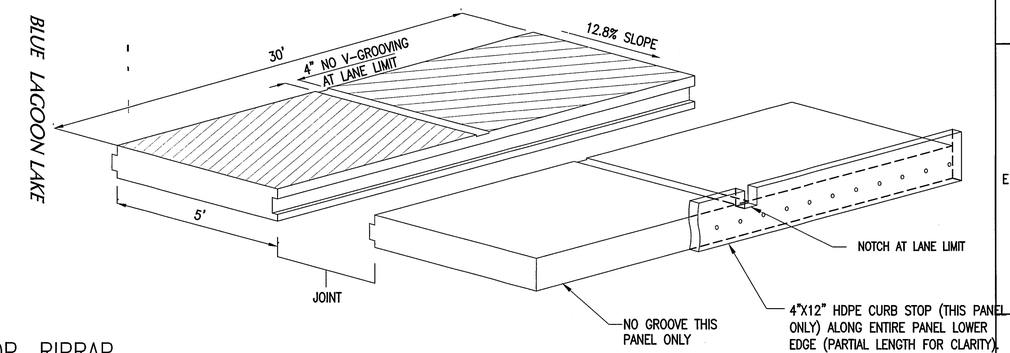

1 TYPICAL PRECAST PANEL ISOMETRIC VIEW
NTS

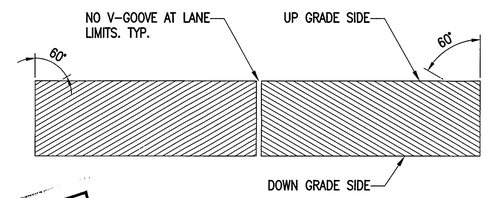

V-GROOVE FINISH
NTS

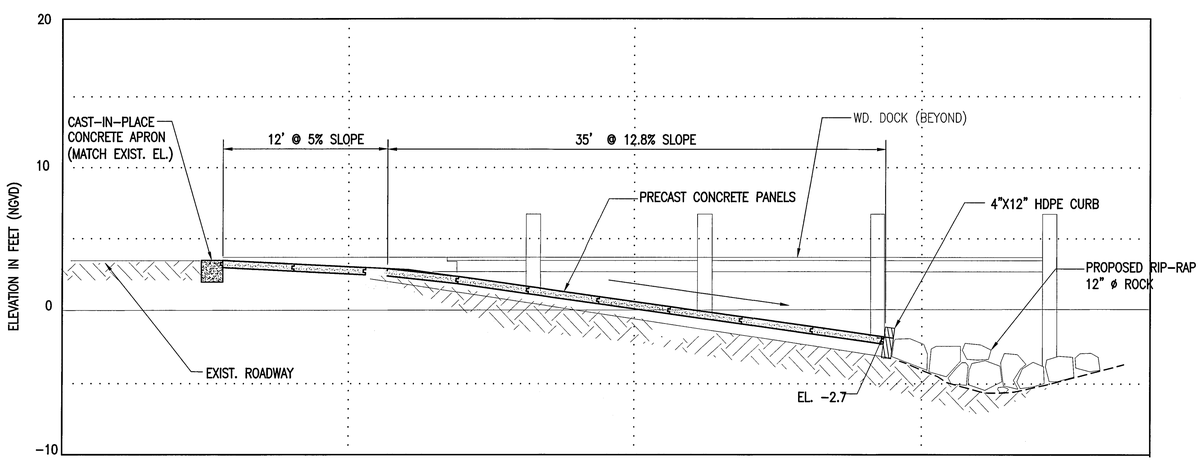

A PROPOSED BOAT RAMP PLAN
SCALE: 1" = 5'

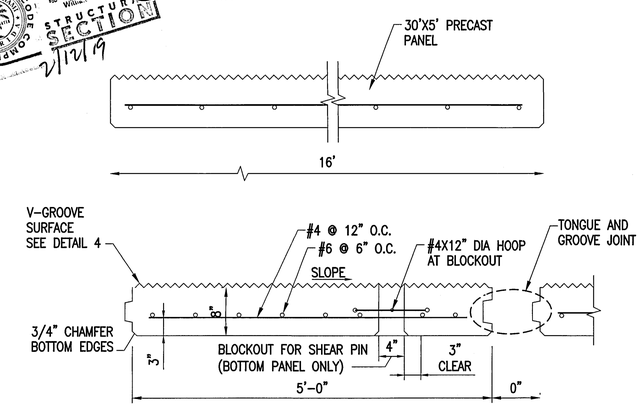

3 PRECAST PANEL TYPICAL SECTION

NOTE:
ATTACH HDPE CURB STOP TO CONCRETE FACE WITH 1/2" DIAMETER 316 THREADED RODS (EMBED 6-INCHES) IN EPOXY (MARINE GRADE) GROUTED HOLES 18" SPACING. SECURE WITH 316 SS PLATE WASHERS AND DOUBLED NUTS. (TYP)
PANELS SHALL BE PLANT-MANUFACTURED SO THAT PANEL IS FLAT AND SQUARE.
PANELS SHALL BE INSTALLED PRIOR ARMOR ROCK PLACEMENT.

NOTE:
ALL SCALES INDICATED PERTAIN TO FULL SIZE DRAWINGS - 22"x34"

BUILDING DEPARTMENT REVIEWED FOR CODE COMPLIANCE 2 STRUCTURAL SECTION 2/12/19

ANTONIO MACE
5135 N.W. 7TH STREET
MIAMI, FLORIDA
B

CITY OF MIAMI
OFFICE OF
IMPROVE

APPROVED FOR PERMIT
City of Miami BUILDING DEPARTMENT
REVIEWED FOR CODE COMPLIANCE
BD18015988001
04/02/21

COASTAL SYSTEMS INTERNATIONAL

COASTAL SYSTEMS INTERNATIONAL, INC.
464 South Dixie Highway
Coral Gables, Florida 33146
Tel: 305-661-3655
Fax: 305-661-1914
www.CoastalSystemsInt.com
State of Florida EB #7087
Coastal, Environmental,
Civil Engineering and Management

CONSULTANTS

ISSUE	DATE	DESCRIPTION
	09/05/18	CITY COMMENTS
	08/14/18	CONSTRUCTION PLANS
	04/02/18	PERMIT SET

PROJECT NO:	220260.10
DATUM:	NAVD
DRAWN BY:	SV
CHECKED BY:	MK

ENGINEER OF RECORD

ANTONIO MARES PEREZ LICENSE No. 66507 STATE OF FLORIDA PROFESSIONAL ENGINEER
OCT 01 2018

PROPOSED RAMP REPLACEMENT PLAN, SECTION & DETAILS

S-3

f:\Project\220260.10\construction drawings\220260.10 _RAMP SET.dwg