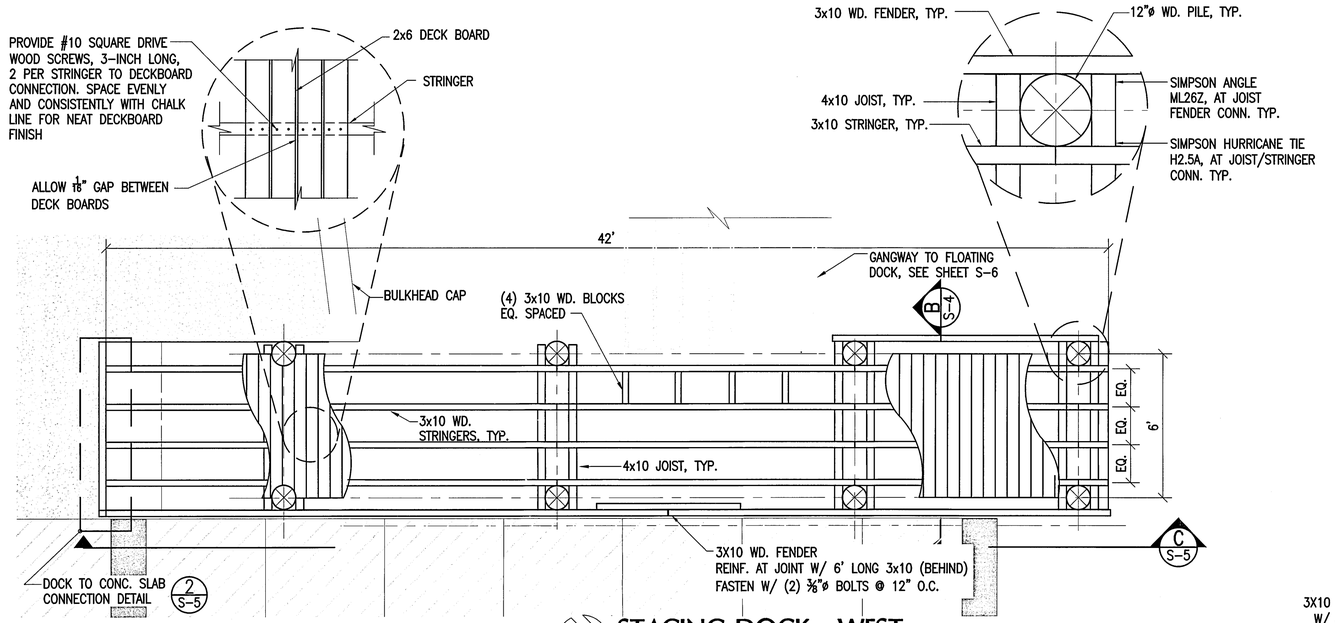

STAGING DOCK - WEST
SCALE: 1"=3'

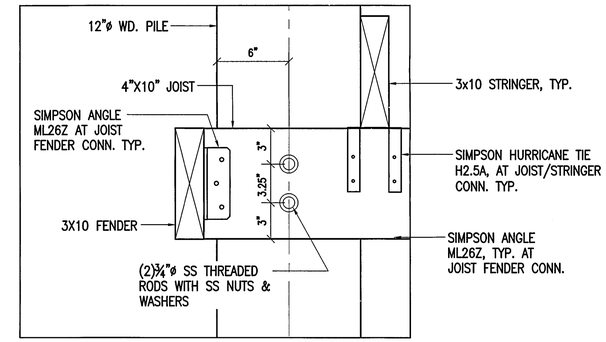

1 PILE/JOIST CONNECTION DTL
SCALE 1"=1'

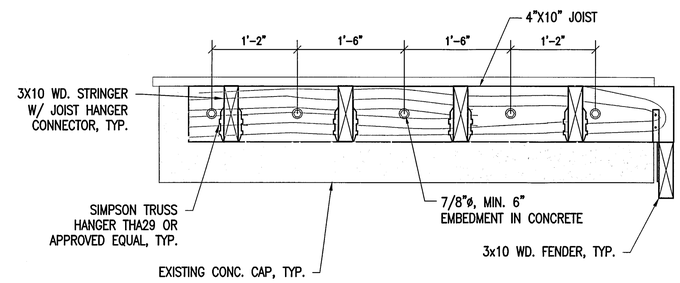

2 DOCK TO CONC. SLAB CONNECTION DETAIL
SCALE: 1"=1'

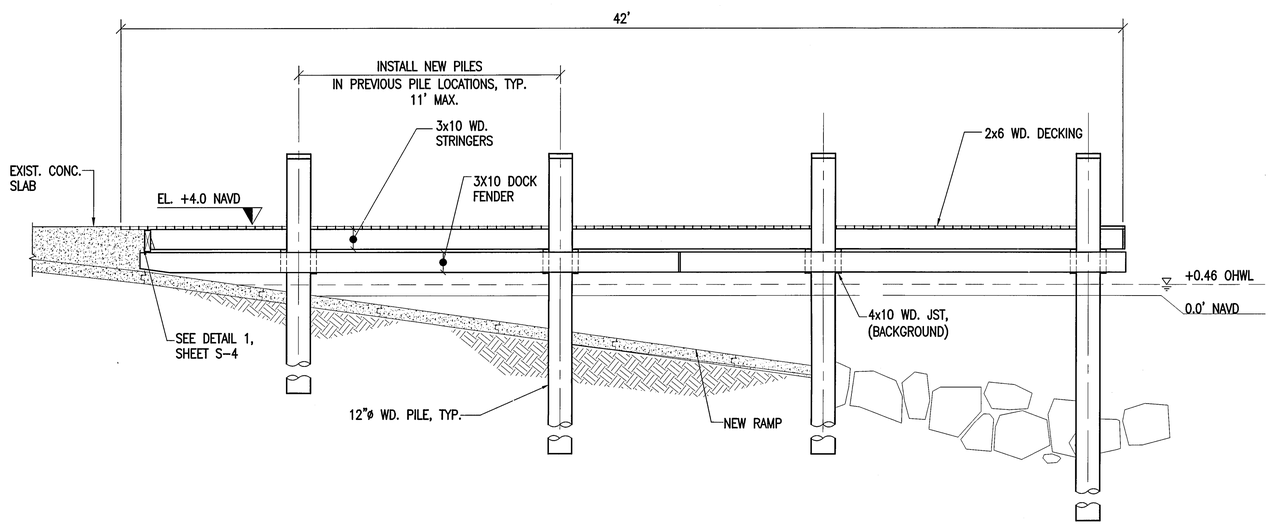

NOTE:
PROPOSED WD. DOCK AND PILING TO BE INSTALLED ON THE FOOTPRINT OF EXISTING DOCK

C STAGING DOCK ELEVATION
SCALE 1"=3'

NOTE:
ALL SCALES INDICATED PERTAIN TO FULL SIZE DRAWINGS – 22"x34"

ANTONIO MACHADO
BOAT RAMP
5135 N.W. 7TH STREET
MIAMI, FLORIDA
B-57

CITY OF MIAMI
OFFICE OF CAPITAL IMPROVEMENTS
PROJECT No. B-

APPROVED FOR PERMIT
City of Miami BUILDING DEPARTMENT
Approval of this plan is for permitting purposes only, and does not imply that it does not violate, cancel, alter or set aside any of the provisions of the Miami-Dade County adopted technical codes, ordinances, laws or regulations, nor does issuance of a permit prevent the Building Official from subsequently requiring correction of errors in either the plans or construction, or any deficiencies which may have been omitted or overlooked in the plan review or permitting process.
BD18015988001
04/02/21
REVIEWED FOR CODE COMPLIANCE

COASTAL SYSTEMS INTERNATIONAL

COASTAL SYSTEMS INTERNATIONAL, INC.
464 South Dixie Highway
Coral Gables, Florida 33146
Tel: 305-661-3655
Fax: 305-661-1914
www.CoastalSystemsInt.com
State of Florida EB #7087
Coastal, Environmental,
Civil Engineering and Management

CONSULTANTS

ISSUE	DATE	DESCRIPTION
	09/05/18	CITY COMMENTS
	08/14/18	CONSTRUCTION PLANS
	04/02/18	PERMIT SET

PROJECT NO: 220260.10
DATUM: NAVD
DRAWN BY: SV
CHECKED BY: MK

ENGINEER OF RECORD

ANDRES FERRER LICENSED No. 66507 STATE OF FLORIDA PROFESSIONAL ENGINEER
OCT 01 2018

BUILDING DEPARTMENT
STRUCTURAL SECTION
REVIEWED FOR CODE COMPLIANCE
2/12/19

STAGING DOCK WEST PLAN & PROFILE

S-5

f:\Project\220260.10\construction drawings\220260.10 _STAGING DOCKS.dwg