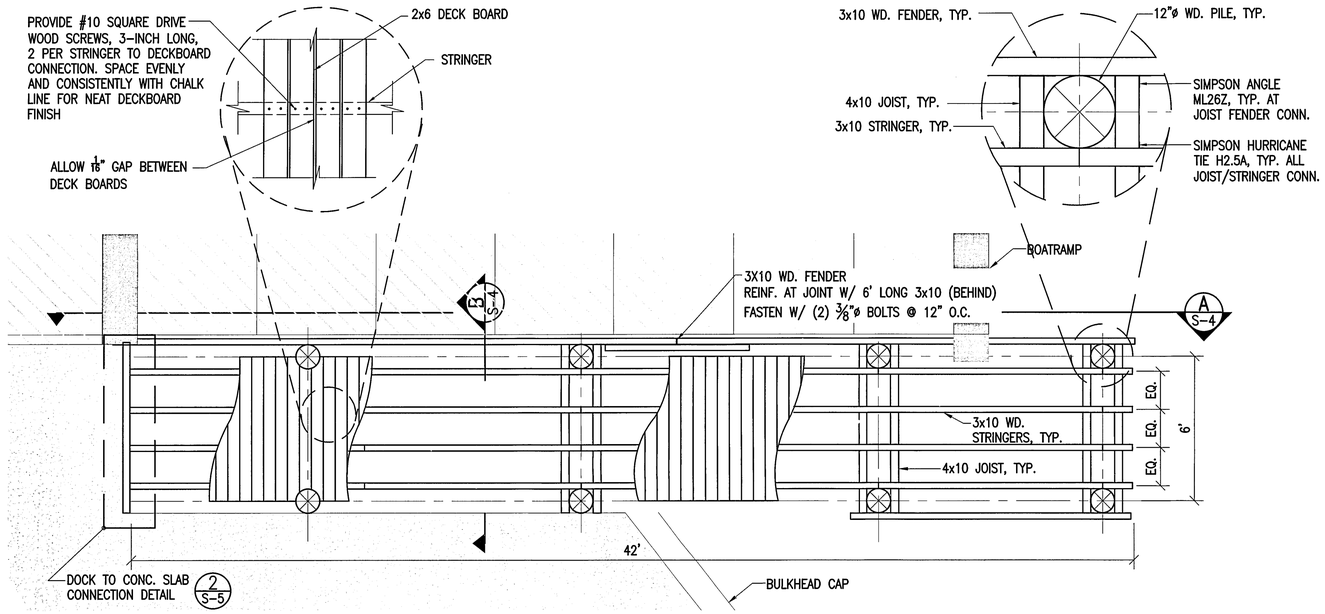

STAGING DOCK - EAST

SCALE: 1"=3'

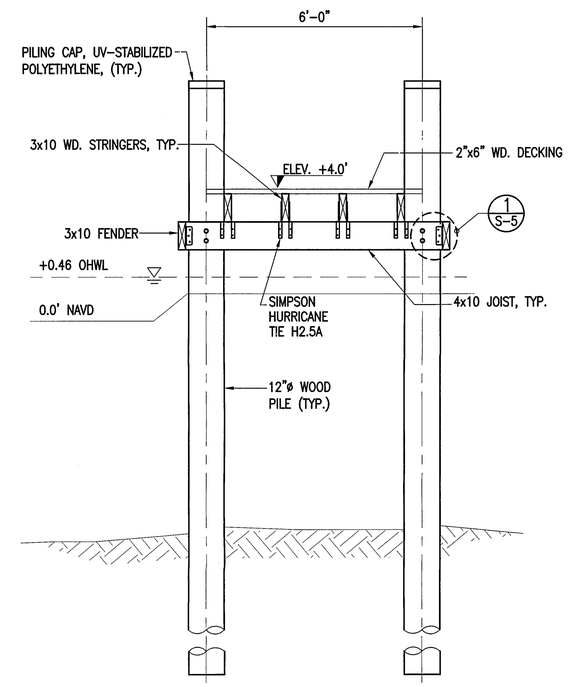

B SECTION

SCALE 1"=3'

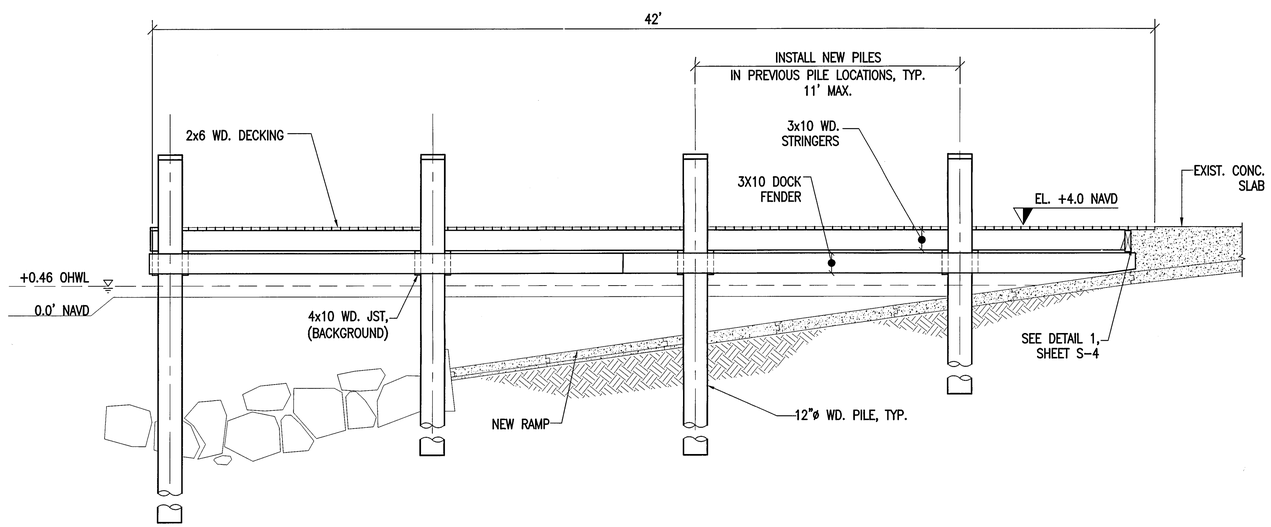

NOTE:
PROPOSED WD. DOCK AND PILING TO BE INSTALLED ON THE FOOTPRINT OF EXISTING DOCK

A STAGING DOCK ELEVATION

SCALE 1"=3'

NOTE:
ALL SCALES INDICATED PERTAIN TO FULL SIZE DRAWINGS – 22"x34"

ANTONIO MACEO PARK
BOAT RAMP
5135 N.W. 7th STREET
MIAMI, FLORIDA
B-37

CITY OF MIAMI
OFFICE OF CAPITAL IMPROVEMENTS
PROJECT No. B-

APPROVED FOR PERMIT
City of Miami
BUILDING DEPARTMENT
This set of plans is for permitting purposes only, and does not imply approval to violate, cancel, alter or set aside any of the provisions of the Miami-Dade County adopted technical codes, ordinances, laws or regulations, nor does issuance of a permit prevent the Building Official from requiring correction of errors in either the plans or construction, or any deficiencies which may have been omitted or overlooked in the plan review or permitting process.
BD18015988001
04/02/21
REVIEWED FOR CODE COMPLIANCE

COASTAL SYSTEMS INTERNATIONAL

COASTAL SYSTEMS INTERNATIONAL, INC.
464 South Dixie Highway
Coral Gables, Florida 33146
Tel: 305-661-3655
Fax: 305-661-1914
www.CoastalSystemsInt.com
State of Florida EB #7087
Coastal, Environmental,
Civil Engineering and Management

CONSULTANTS

ISSUE	DATE	DESCRIPTION
	09/05/18	CITY COMMENTS
	08/14/18	CONSTRUCTION PLANS
	04/02/18	PERMIT SET

PROJECT NO: 220260.10
DATUM: NAVD
DRAWN BY: SV
CHECKED BY: MK

ENGINEER OF RECORD

ANDRES PEREZ LICENSE No. 66507 STATE OF FLORIDA PROFESSIONAL ENGINEER
OCT 01 2018

BUILDING DEPARTMENT REVIEWED FOR CODE COMPLIANCE STRUCTURAL SECTION 2/12/19

STAGING DOCK EAST PLAN & PROFILE

S-4

f:\Project\220260.10\construction drawings\220260.10 _STAGING DOCKS.dwg